RoHS Compliant **HF**

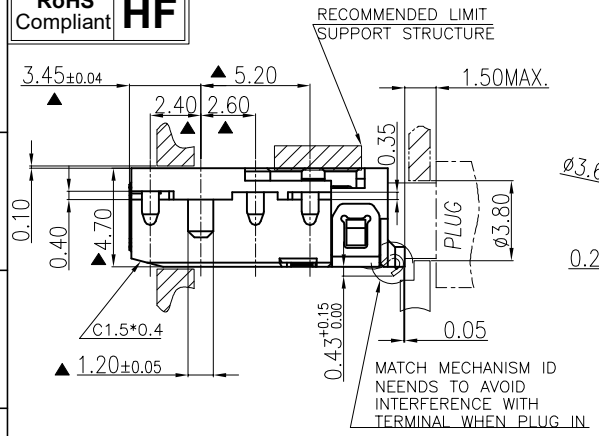

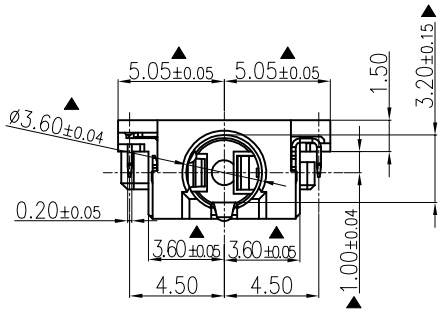

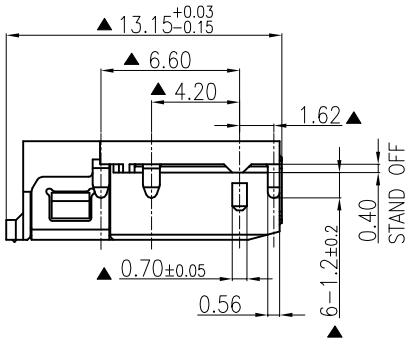

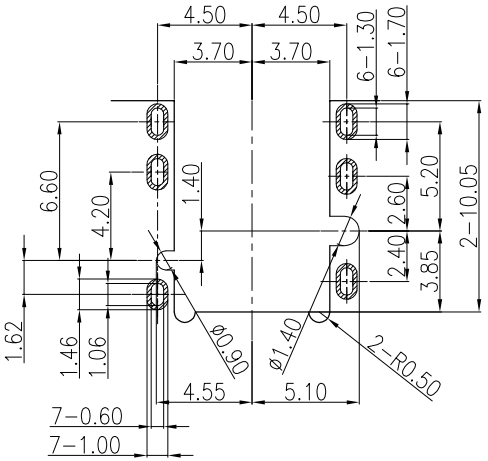

RECOMMENDED PCB LAYOUT

TOP VIEW; TOL.±0.05

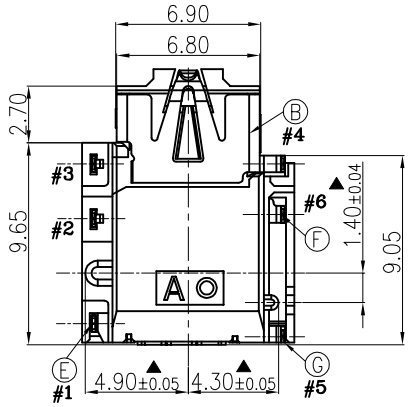

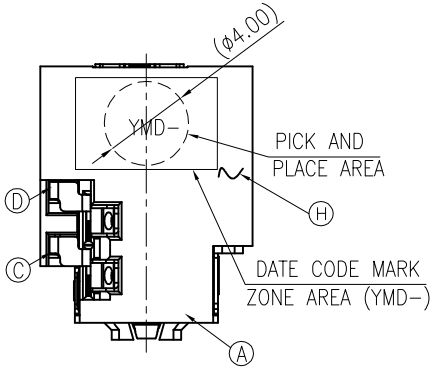

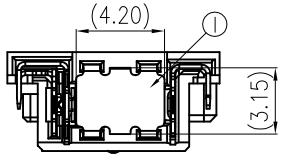

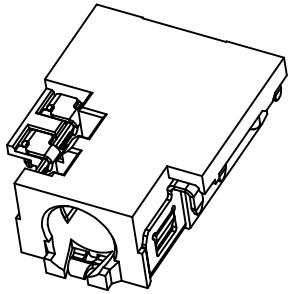

REV.	ECN.NO	MODIFY.CONTENT
X1		初版发行
X2	/	Housing表面加胶 0.20
A	/	转正式版发行

备注:

1. 电气性能:
   1-1. 接触阻抗: 50mΩ最大(初始),
   100mΩ最大(测试后)
   1-2. 耐压测试: 500V AC 一分钟.
   1-3. 绝缘阻抗: 100MΩ最小.
   测试电压500V直流
2. 机械性能:
   2-1. 公头插入力: 0.8~3.0kgf
   2000寿命后: 2.50kgf MAX.
   2-2. 公头拔出力: 0.6~1.8kgf.
   2000寿命后: 0.5kgf MIN.
3. 寿命测试: 5,000次.
4. 用于回流焊无铅工艺
5. 抗回流焊焊接温度 260°C.
6. 使用公头应符合协会规范
   EIAJ RC-5325 SPEC.
7. 包装方式: 载带卷盘.
8. 产品需符合无铅和无卤要求。
9. ▲为重点尺寸

PART.NO:
AJ185-BM401-**

- 08: 功能区镀金1U", 锡脚镀GOLD/FLASH
- 09: 功能区镀金3U", 锡脚镀GOLD/FLASH
- 10: 功能区镀金5U", 锡脚镀GOLD/FLASH
- 11: 功能区镀金10U", 锡脚镀GOLD/FLASH
- 12: 功能区镀金15U", 锡脚镀GOLD/FLASH
- 13: 功能区镀金30U", 锡脚镀GOLD/FLASH

NO.	DESCRIPTION	QTY	MATERIAL	REMARK
I	SHELL	1	SUS301-1/2HI, 0.15t	CLEANING
H	SEPARATOR	1	LCP E130I,UL94V-0	Black
G	TRANSFER SPRING	1	C5210-EH, 0.20t	Au1u"Min ON CONTACT AREA Au1u"Min ON SOLDER TAIL . ALL OVER NICKEL 50u"Min UNDER PLATED
F	MAKE terminal	1	C5210-EH, 0.20t	
E	TIP SPRING	1	SUS304-1/2H, 0.20t	
D	RING-A	1	C5210-EH, 0.20t	
C	RING-B	1	C5210-EH, 0.20t	
B	EARTH	1	C5210-EH, 0.20t	
A	BODY	1	PA10T R630NH UL94V-0	Black

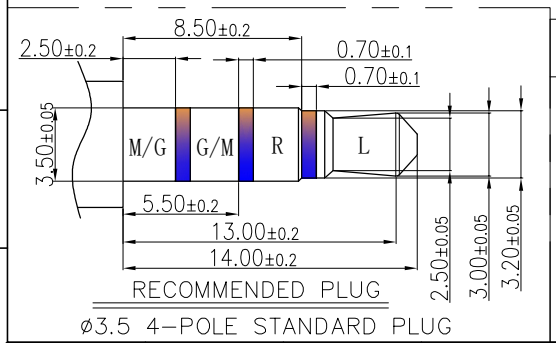

RECOMMENDED PLUG

ø3.5 4-POLE STANDARD PLUG

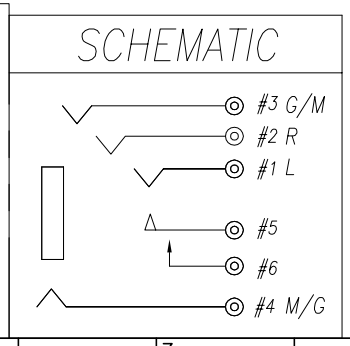

X.±0.20	X.°± 5°	UNITS	UNITS
.X±0.15	.X°± 2°	MAT'L	
.XX±0.10	.XX°± 1°		
.XXX±0.05	.XXX°± 0.5°	FINISH	
		Q'TY	

THESE DRAWINGS AND SPECIFICATIONS ARE THE PROPERTY OF OLN ELECTRONICS TECHNOLOGY CO., LTD. AND SHALL NOT BE REPRODUCED. COPIED OR USED IN ANY MANNER WITHOUT THE PRIOR WRITTEN CONSENT OF OLN ELECTRONICS TECHNOLOGY CO., LTD.

NAME(INTENDED USE): ø3.5mm AUDIO JACK CONN

PART NO.(INTENDED USE): AJ185-BM401-**

APPD:

CHKD:

DR: Amin 2023-02-21

OLN 东莞市欧联电子科技有限公司
DONGGUAN OLN ELECTRONICS TECHNOLOGY CO., LTD.

TITLE: AUDIO JACK 4 POLE R/A TYPE

DWG NO.: AJ185-BM401-00

SCALE	SHEET	REV.
1:1	1/2	A